Downloaded on 08-07-2026

Other Recycling Equipment

DP16



Drum Press DP16

Compress drums by 90%
Easily compress your steel or oil drums. The drum press compacts the drums by 90%.

For drums up to 200 litre
The drum press easily handles drums without explosive content up to 200 litre.

Highlights

- Up to 90% compaction
- Spikes in the press plate puncture the drum and remove air
- High degree of safety
- Interlock system prevents the motor from running unless the door is closed
- Compressed drums are easy to stack and store

Details and benefits



Compact oil drums and other drums without explosive contents.



Spikes mounted underneath the press plate puncture the drum and remove air.

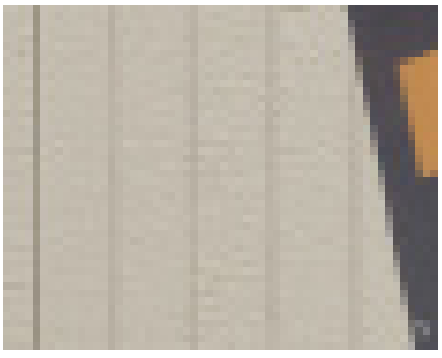

As an option, we offer a special drip tray to collect residuals.

BRAMIDAN®
bramidan.ie



Product details

Drum Press DP16

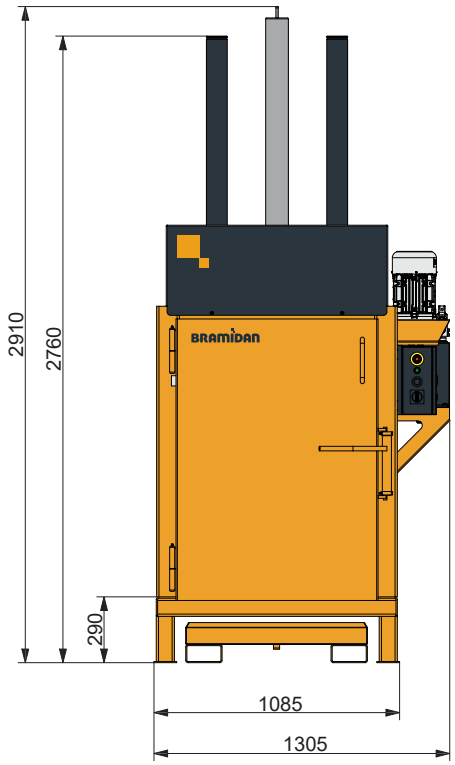

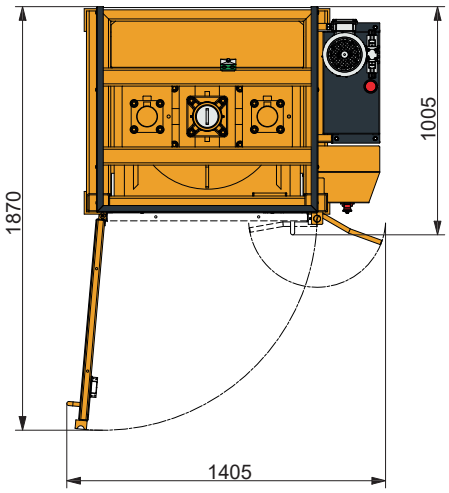

Technical specifications	
Power supply	3x400V 50Hz 16A
Motor (kW)	4.0
Noise Level (dB)	62-64
Dimensions WxDxH (mm)	1305 x 1005 x 2910
Weight (kg)	880
Stroke (mm)	985
Feed opening WxH (mm)	600 x 950
Filling height (mm)	200

Press force	16 t
Feed opening	600 x 950 mm
Cycle time	45 sec.

BRAMIDAN®
bramidan.ie

Bramidan Ireland
Unit 5 Feltrim Business Park
Drynam Road
Swords, Co Dublin K67 VK51
Tel. 1 890 0660
sales@acmesystems.ie / sales@bramidan.ie