Downloaded on 08-07-2026

Other Recycling Equipment

CT



Tipping system CT

Efficient emptying of bins
Flexible tipping and emptying systems for standard plastic bins.

Individual solutions
With three different models and different options, you can get a tipping system that suits your individual needs.

Highlights

- For standard bins
- Fixed- or swivel wheels or stationary legs
- Tipping height between 1600-2500 mm
- For bins up to 1100 litres
- User panel can be placed on the right or left side
- Durable design – strong steel construction
- Hydraulic cylinders
- Safe in use

Details and benefits



The tipping system can handle various types of bins and containers up to 1100 litres.



You choose whether you want the control panel placed on either left or right side of the tipping system.



We supply both stationary and moveable tipping systems. The last-named have fixed wheels or swivel wheels, which can be locked with a brake.

BRAMIDAN®
bramidan.ie



Product details

Tipping system CT

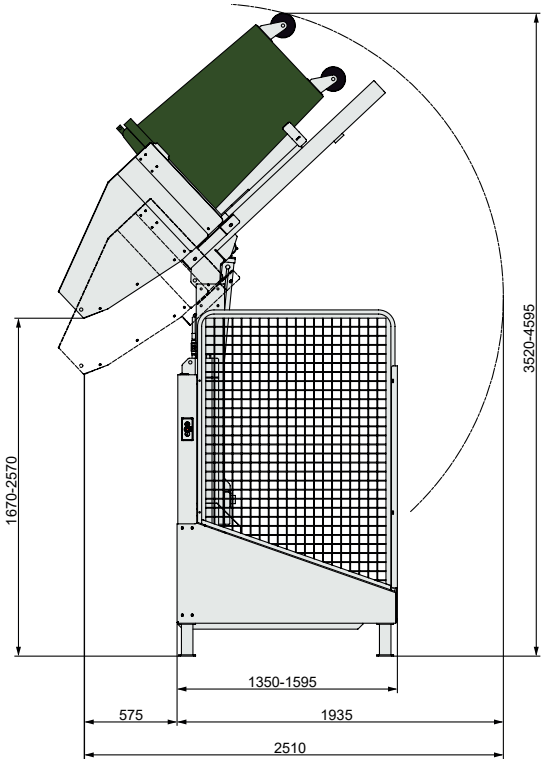

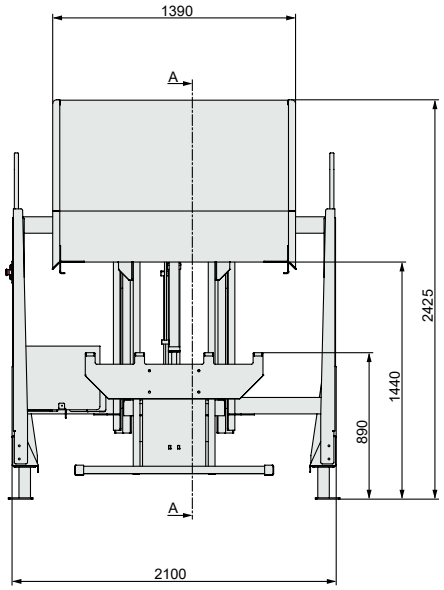

Technical specifications	
Power supply	1x230V 50Hz 10A
Motor (kW)	1.1
Noise Level (dB)	65-68
Screen 40 mm (m3/h)	57-75
Dimensions WxDxH (mm)	2100 x 2510 x 4600
Tipping angle (degree)	135
Container size (litres)	<1100 L
Load capacity (kg)	400

Container size	<1100 litres
Tipping height	1670-2570 mm
Load capacity	400 kg

BRAMIDAN®

bramidan.ie

Bramidan Ireland
Unit 5 Feltrim Business Park
Drynam Road
Swords, Co Dublin K67 VK51
Tel. 1 890 0660
sales@acmesystems.ie / sales@bramidan.ie